Radiant Australia Pty Ltd Unit 1 / 18 Profit Pass, Wangara, WA 6065
t: 08 9302 4140 f: 08 8490 2343 e: orders@radiant.com.au

radiant AUSTRALIA

ROUND HEATED

RTR03 – Standard 240V model

MIRROR POLISHED AND BRUSHED SATIN MANUFACTURED FROM 304 GRADE STAINLESS STEEL

COLOURED FINISHES MANUFACTURED FROM 201 GRADE STAINLESS STEEL

IP55 RATED (COLOURED FINISHES ARE IP54 RATED)

ALL TOWEL RAILS AVAILABLE WITH EITHER BOTTOM LEFT OR RIGHT OUTPUT

ALL STANDARD RAILS ARE DUAL PURPOSE, OFFERING A PLUG AS STANDARD, BUT PACK CONTAINS A HARD WIRING KIT

CAN BE MOUNTED UPSIDE DOWN

10 YEAR WARRANTY FOR CONSTRUCTION / HEATING ELEMENT

COATING ON COLOURED RAILS ARE COVERED BY A 2 YEAR WARRANTY

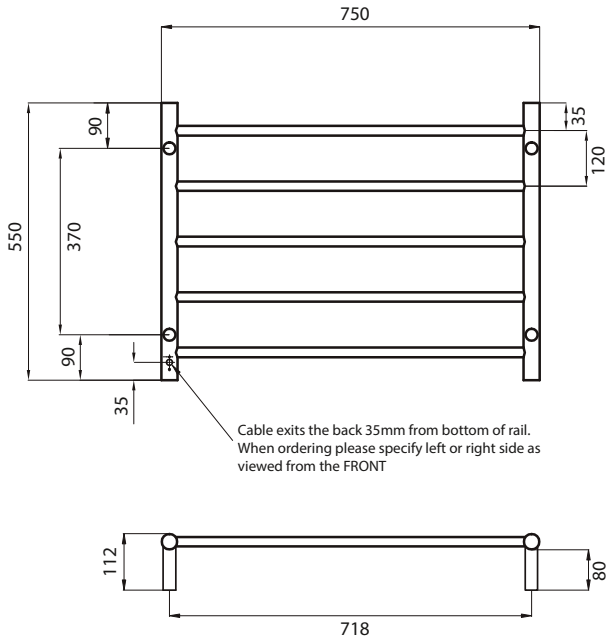

FEATURES

- Round bar / Height 550mm / 5 evenly spaced bars / 75W (Black rail 100W)
- Standard model is 240V / IP55 rated
- Vertical bars 32mm diameter
- Horizontal bars 19mm diameter
- 112mm from wall
- Cable length: 1.4m, plug included

Please note: Due to manufacturing constraints beyond our control, our coloured towel rails may have minor colour variances in different batches, so may be slightly different to the images and colour samples you may have seen.

CODE	SIZE (MM)	FINISH
RTR03LEFT	750x550	Polished
RTR03RIGHT	750x550	Polished
BRU-RTR03LEFT	750x550	Brushed Satin
BRU-RTR03RIGHT	750x550	Brushed Satin
BRTR03LEFT	750x550	Matt Black
BRTR03RIGHT	750x550	Matt Black
GMG-RTR03LEFT	750x550	Gun Metal Grey
GMG-RTR03RIGHT	750x550	Gun Metal Grey
GLD-RTR03LEFT	750x550	Brushed Gold
GLD-RTR03RIGHT	750x550	Brushed Gold
BN-RTR03LEFT	750x550	Brushed Nickel
BN-RTR03RIGHT	750x550	Brushed Nickel
LG-RTR03LEFT	750x550	Light Gold
LG-RTR03RIGHT	750x550	Light Gold
CH-RTR03LEFT	750x550	Champagne
CH-RTR03RIGHT	750x550	Champagne

PLEASE NOTE: NOT ALL PRODUCTS ARE AVAILABLE IN ALL FINISHES. IF NOT LISTED IN THE SPECIFICATIONS IT IS NOT CURRENTLY AVAILABLE.